International Engineering Research Journal

Design and CFD Analysis of the Volute Geometry Effect on the Turbulent Air Flow through the Turbocharger Compressor.

[1]Vishal Rananaware, [2]Prof. Imran Quazi

[1]Mechanical Department, Savitribai Phule University, Pune, India.
[2]Mechanical Department, Savitribai Phule University, Pune, India

ABSTRACT

This study analyses the outlet recirculation of a centrifugal compressor used in turbocharger of automobile diesel engine. Using 3D Computational Fluid Dynamics (CFD), the point at which the recirculation flow begins to develop and rate at which is investigated. Three-dimensional time-averaged impeller and volute simulations are performed using Navier-Stokes equations. Volute design is major key parameter in performance and efficiency of a compressor. The results also suggest direction for further investigations in volute design.
Keywords: centrifugal compressor; volute, CFD analysis.

NOMENCLATURE

EFF	Total to total isentropic efficiency
PR	Pressure ratio
$Po,_{out}$	Inlet absolute stagnation pressure
$Po,_{in}$	Outlet absolute stagnation pressure
DO	Diffuser outlet
SO	Scroll outlet
CA	Critical area

1. INTRODUCTION

The turbocharger has an irreplaceable role in improving engine power, reducing fuel consumption and decreasing emissions. With the development of environmental protection in many countries, energy-saving emissions have become the goal of engine industry.

A turbocharger is a device which uses a turbine driven by engine exhaust gas energy to provide power to a compressor. Both the compressor and turbine are turbo machines running on a common shaft and bearing system.

Centrifugal compressors consist of four main parts, as shown in Figure 1. The first is a rotating impeller, which imparts work to the gas by increasing its angular momentum. The fluid static pressure and absolute velocity (stationary frame of reference) increase through the impeller passage. The second component is the diffuser section, its responsibility to convert the kinetic energy (high velocity) of the gas into pressure by gradually slowing (diffusing) the gas velocity.

Third component is noise baffle its function is to suppress noise of turbo generated due to MWE feature of compressor housing.

The fourth and final component is a volute or collector, used for collecting the gas from diffuser and delivering to the outlet pipe.

A volute has two functions: collection and diffusion. The volute must collect and transport the fluid to the down stream system. It also raises the static pressure by converting kinetic energy (ρu2) to potential energy (static pressure). The latter function has performance benefits, as the discharge pressure is increased.

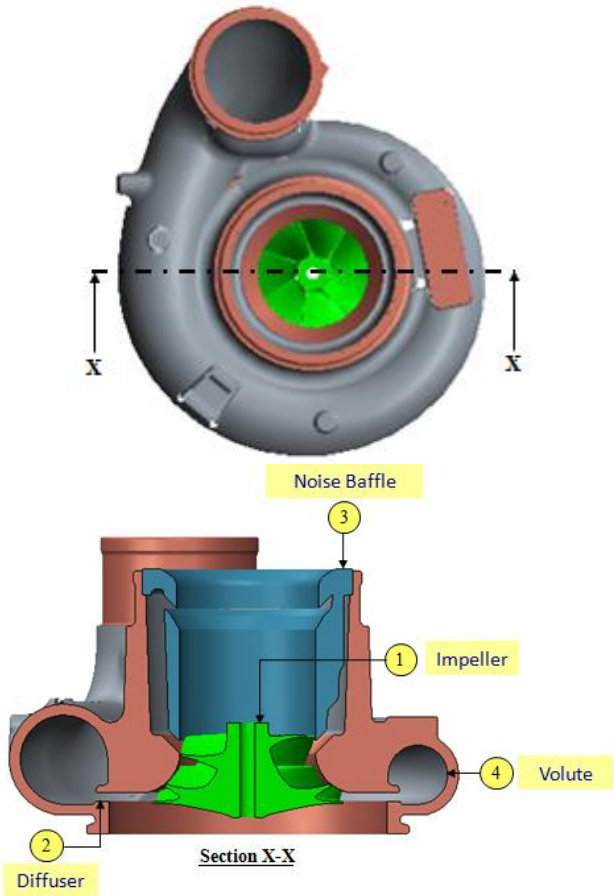

FIGURE 1: Centrifugal Compressor Layout

The main objective of the present work is to
- To extract Fluid volume for CFD analysis.
- To analyze the flow character tics, efficiency & pressure drop across inlet & outlet.
-To suggest design modification if recirculation will observe modification in volute geometry

2. LITERATURE REVIEW

S. Hassan [1] investigated theoretically and experimentally the effect of the volute design parameters on the centrifugal compressor range of stable operation and pressure rise coefficient, especially the theory is devoted to the effect of the area ratio on the stability, while the experience is made for understanding the effect of the gap between the diffuser and the volute casing.

The numerical and experimental analysis of different volutes, elaborated by A. Reunanen [2] showed that the change of the cross section, and the location of the volute inlet affect not only the compressor performance but even the non uniformity of pressure and force related to it at high flow rates.

The development of computers will gradually render the simultaneous three-dimensional time-accurate analyses of the impeller and volute possible. However, according to Hillewaert and Van den Braembussche (1998) [3], some simplifying assumptions are still needed.

There are five key geometrical parameters in volute design (Ayder [4]) circumferential variation of the cross sectional area; shape of the cross-section; radial position of the cross section; position of the volute inlet; and tongue geometry. A design requirement is to make the circumferential pressure distribution uniform.

Evaluation of various mesh configurations focusing on grid density (element count), element aspect ratio and use of inflation layers for volutes in centrifugal compressors by Anil Samale [5] Volute CFD Modeling Evaluation for Centrifugal Compressors.

The numerical simulation of the unsteady flow (URANS + kepsilon model) with an appropriate CFD code has proven by Raúl Barrio , Jorge Parrondo, Eduardo Blanco [6] to be a good methodology to investigate the dynamic characteristics of the flow in the near-tongue region of a vaneless centrifugal pump.

3. VOLUTE DESIGN CONSIDERATION AND PROCESS

The compressor geometry development is carried out on Creo Parametric 2.0; geometrical details of impeller and compressor are shown in fig. 2 & 3 respectively. Geometrical Dimensions of the designed compressor are shown in the table 1. The volute is modeled by assembling a casing.

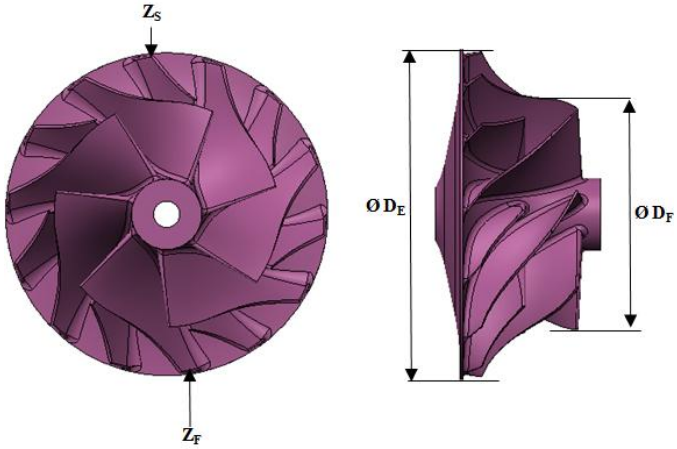

FIGURE 2: Geometrical Details of Impeller

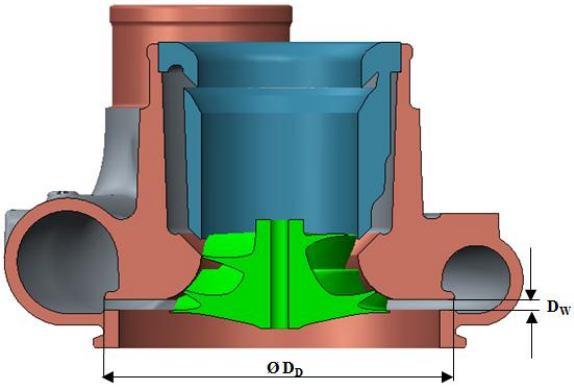

FIGURE 3: Geometrical Details of Compressor

Description	Symbol	Dimension
Number of full blade	Z_F	7
Number of splitter blade	Z_S	7
Impeller Exducer diameter	D_E	8.6 cm
Impeller Inducer diameter	D_F	5.43 cm
Diffuser diameter	D_D	13.68 cm
Diffuser width	D_W	0.39 cm

TABLE 1: Geometrical Dimensions of the designed compressor

The circumferential variation of the cross-sectional area of volute Vs angular position is shown in fig. 4. Graph 1 showing area schedule. Nature of curve is linear, getting advantage of smooth flow of fluid inside volute 360°.

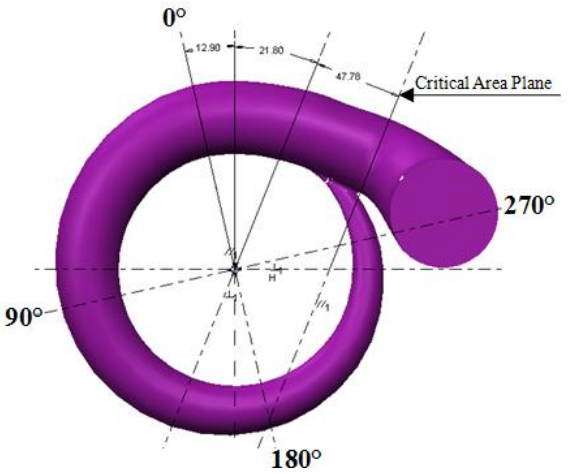

FIGURE 4: Cross-sectional area of volute Vs Angular position & critical area location

ANGLE	AREA (cm^2)	RADIUS (cm)	AREA/RADIUS (AbyR)
0	125.99	8.28	15.22
30	114.33	8.19	13.95
60	102.01	8.10	12.59
90	89.24	8.00	11.16
120	76.25	7.89	9.66
150	63.26	7.78	8.14
180	50.56	7.65	6.61
210	38.41	7.52	5.11
240	26.00	7.38	3.52
270	16.21	7.29	2.22
300	7.50	7.21	1.04

TABLE 2: Area schedule and AbyR values with respect to angular position of volute

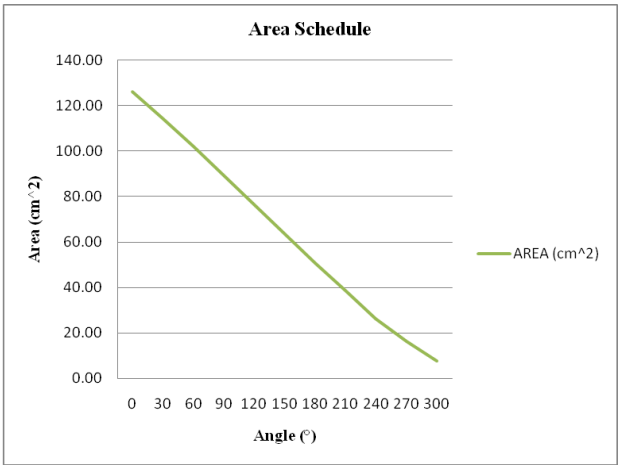

GRAPH 1: Area Schedule

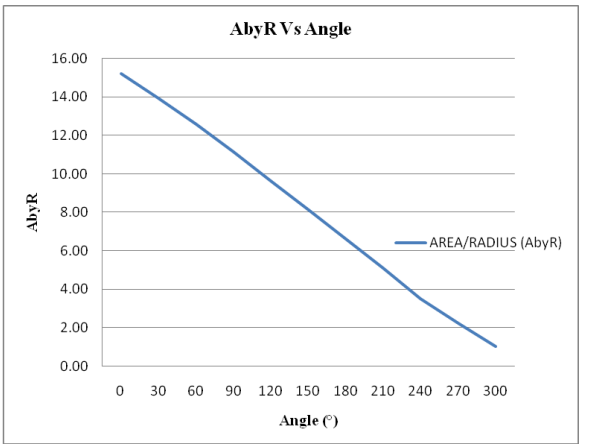

GRAPH 2: AbyR Vs Angular position of volute

4. CFD VOLUME EXTRACTION

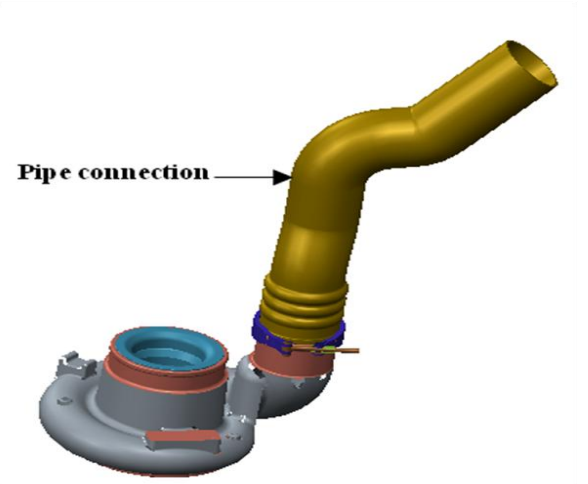

FIGURE 5: Connection for engine intake

Pipe connection has been used for fluid transfer from compressor outlet to engine intake shown in fig. 5. CFD volume extraction has been done in Creo Parametric 2.0.

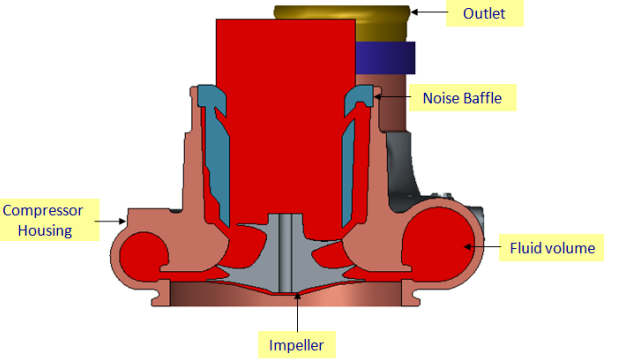

FIGURE 6: CFD volume (Red color)

Copied all internal surfaces of compressor housing and solidify it. Taken cut out of impeller wheel (grey color), noise baffle (blue color) and removed all sharp edge to the enhancement of mesh generation.

5. GRID GENERATION AND CFD METHOD

Single passages of the impeller, inlet and outlet are modeled and manual multi-block techniques using ANSYS 15.0 were applied to develop a fully tet mesh. Mesh size for inlet, impeller & outlet are 1.6, 3.23 & 1.6 Million respectively. Figure 7 shows volume overall mesh generator.

Performed steady state CFD analyses. The inlet, outlet and scroll were specified as four different stationary domains, while the impeller was specified as a rotating domain. The frozen rotor interface approach was used to connect the rotating and stationary frames of reference and the GGI connection was used between the two stationary frames of reference. Total atmospheric pressure and temperature values were applied as inlet boundary conditions, and the average static pressure over the whole outlet area was used as the outlet boundary condition.

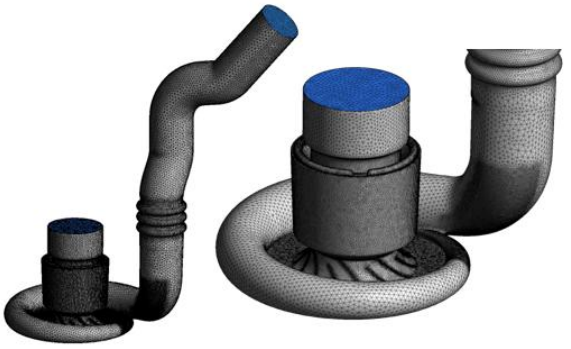

FIGURE 7: Overall Mesh Generation

The CFX SST (Shear Stress Transport) turbulence model was used with scalable wall function is used to capture wall effect. 5 boundary layer is created in meshing with first cell height of 0.05 mm.

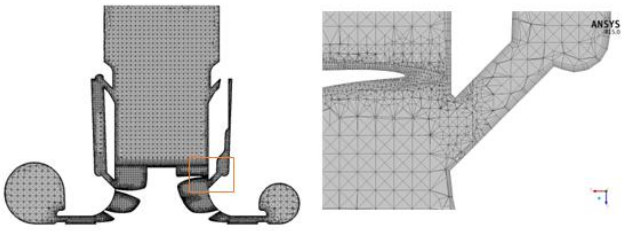

FIGURE 8: Overall Mesh Generation

Figure 8 shows generated mesh at impeller. Mesh size at this section is 3.26 million.

6. GOVERNING EQUATIONS

1. Compressor Pressure Ratio

The compressor pressure ratio is defined as:

$PR = [Po,_{out} / Po,_{in}]$

2. Compressor Isentropic Efficiency

The isentropic efficiency of a compressor is given by:

$EFF = W_{ideal\ comp} / W_{actual\ comp}$

Where,

$W_{actual\ comp}$ = Work done on the gas flowing through the compressor

$W_{ideal\ comp}$ = Work that would be required to compress the gas isentropic ally through the pressure ratio across the compressor

3. Corporate Standard Speed Parameter:

Speed Parameter = $[N_{physical} * \sqrt{T_{o,in}}] / P_{o,in}$

where,

$N_{physical}$ = Impeller RPM [rev/sec]

$T_{o,in}$ = Outlet temperature [K]

Po, in= Inlet pressure [MPa]

7. BOUNDARY CONDITIONS

Working fluid is air at the ambient condition of temperature 273.15 K and pressure 101325 Pa.

At different speed of Impeller 45, 80 & 100 KRPM calculated speed parameter and isentropic efficiency.

Plotted graph of isentropic efficiency Vs MFP shown in graph

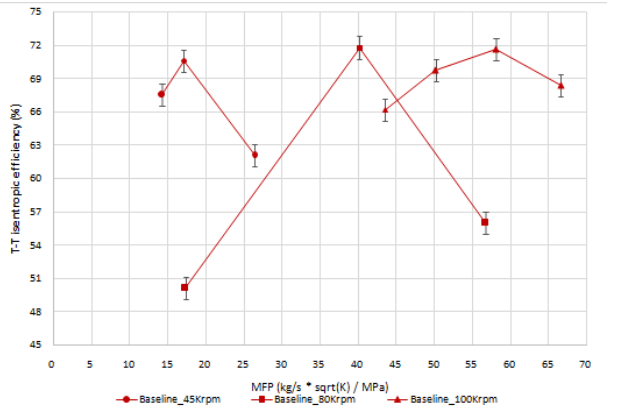

GRAPH 3: Isentropic efficiency Vs MFP

At different speed of Impeller get different behavior of graph in between isentropic efficiency Vs MFP. It has been observed that for impeller speed 80KRPM maximum isentropic efficiency is 71.75 %. Then calculated pressure ratio [PR] and plotted graph in between PR VS MFP shown in graph 4.

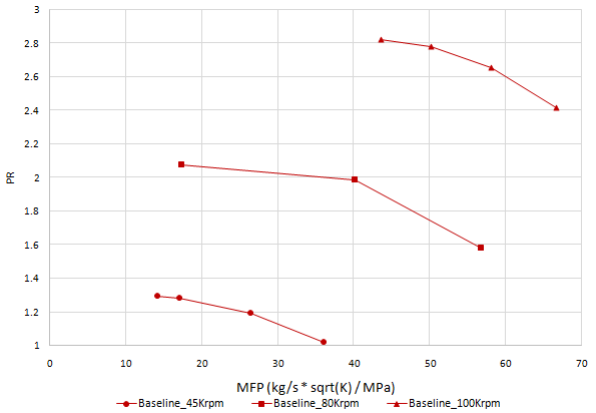

GRAPH 4: Isentropic efficiency Vs MFP

8. RESULTS

1. Pressure Distribution [bar]

Figure 9 represents total pressure distribution across volume.

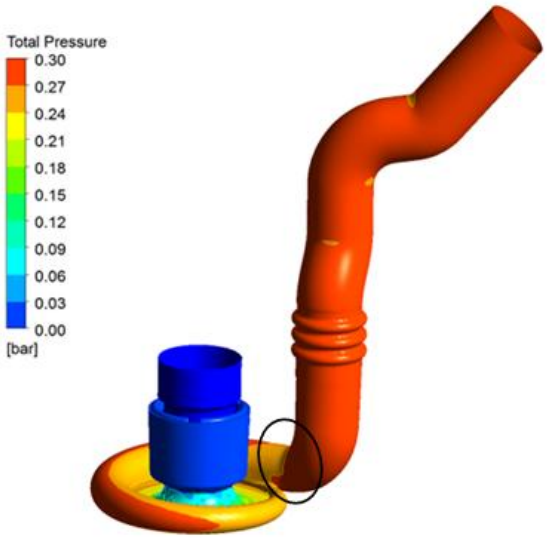

FIGURE 9: Total Pressure distribution across volume

Observed sudden change in pressure near outlet region as there is sudden change in section. Maximum magnitude of pressure is 0.30 bar.

2. Streamline

Figure 10 represents total pressure distribution across volume. Observed uniform distribution of streamline overall volume except outlet section.

At outlet observed flow recirculation shown in figure 11 which results in losses and low efficiency, finally impact on performance of compressor.

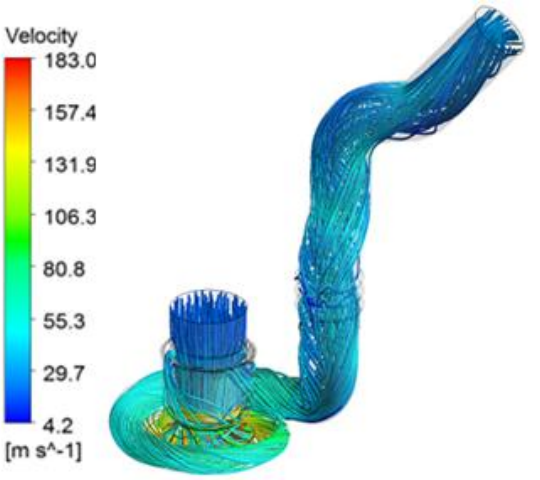

FIGURE 10: Streamline across volume

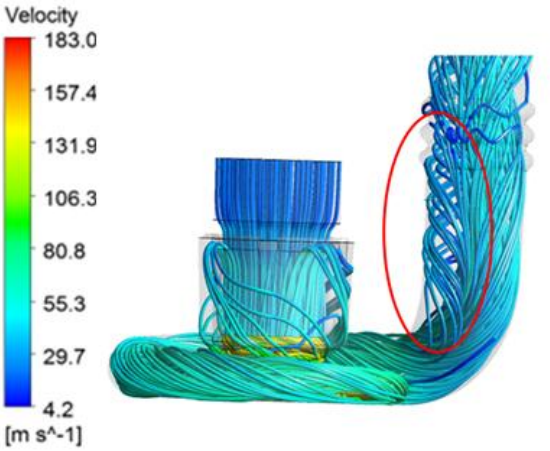

FIGURE 11: Streamline at outlet

9. CONCLUSIONS

Three-dimensional steady-state CFD simulations were performed for a single passage of a turbocharger centrifugal compressor stage to investigate the volute geometry effect on the turbulent air flow through the turbocharger compressor stage.

With this type of volute design obtained peak isentropic efficiency of 71.75 %. Flow recirculation has been observed at outlet section which impact on performance of compressor. Need to do further investigate on volute design to minimize recirculation/ optimize performance.

10. FUTURE SCOPE

1. Modified volute without disturbing outlet location and shape and build stage cavity for next iteration. Refer figure 12 shows modification details.
2. Observed recirculation region in base design has been modified to get uniform streamlines. Refer figure 13 & 14 for details.
3. Need to run analysis and compare with base design for validation purpose.

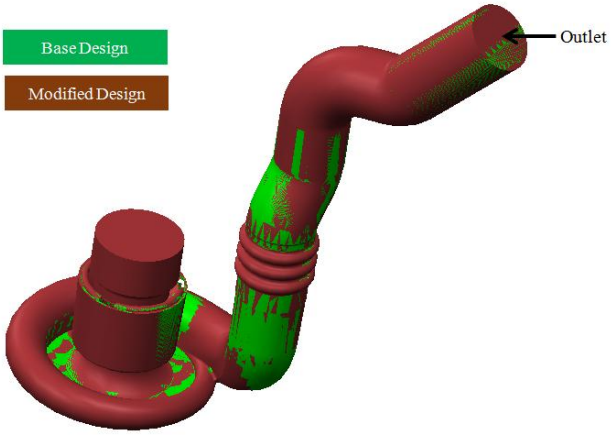

FIGURE 12: Overlay geometry & outlet location

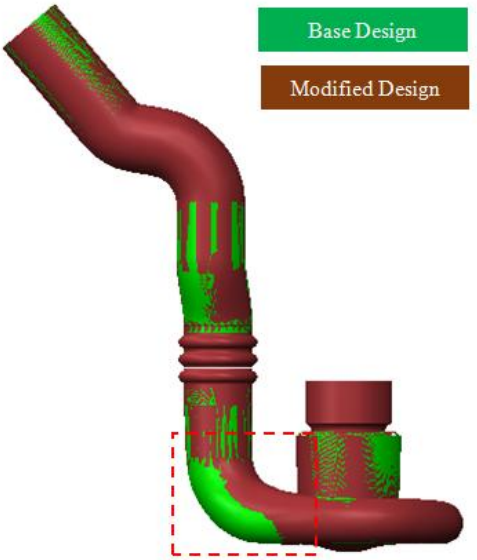

FIGURE 13: Modified region

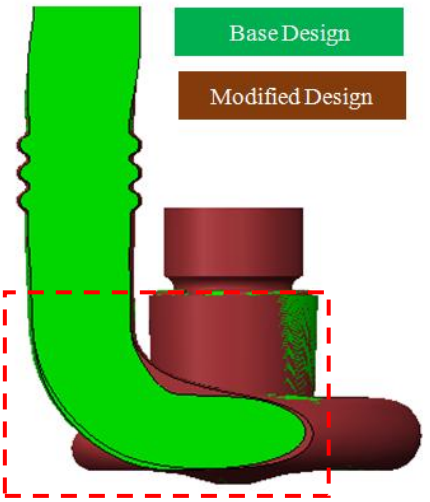

FIGURE 14: Sectional view of modified region

References

[1] A. S. Hassan, Influence of the volute design parameters on the performance of a centrifugal compressor of an aircraft turbocharger, Proc. IMechE Vol. 221 Part A: J. Power and Energy, (2007), pp. 695-704

[2] Arttu Reunanen, experimental and numerical analysis of different volutes in a centrifugal compressor, thesis of the degree of doctor science,(2001) , lappeenranta university of technology

[3] Hillewaert, K., and Van den Braembussche, R., 1998, "Numerical Simulation of Impeller-Volute Interaction in Centrifugal Compressors," ASME Paper No. 98-GT-244.

[4] E. Ayder, “Experimental and numerical analysis of the flow in centrifugal compressor and pump volutes,” Ph.D. dissertation, Von Karman Institute for Fluid

[5] Anil Samale & Jorge E. Pacheco “Volute CFD Modeling Evaluation for Centrifugal Compressors ”.

[6] Raúl Barrio *, Jorge Parrondo, Eduardo Blanco, “Numerical analysis of the unsteady flow in the near-tongue region in a volute-type centrifugal pump for different operating points”.